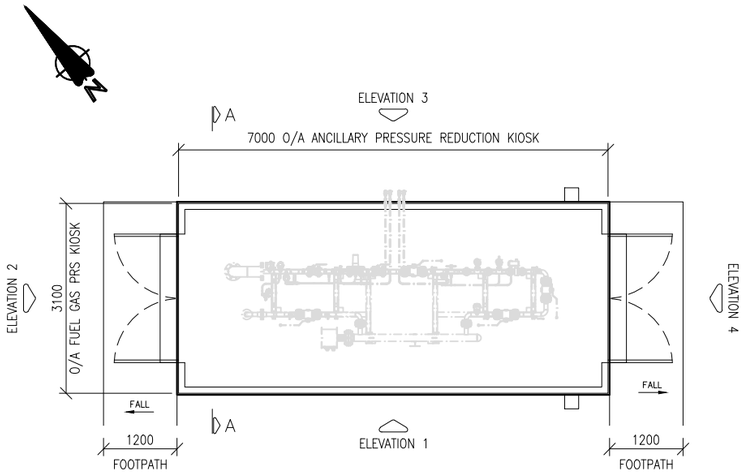

FUEL GAS PRS KIOSK
FLOOR PLAN
(Scale 1:100)

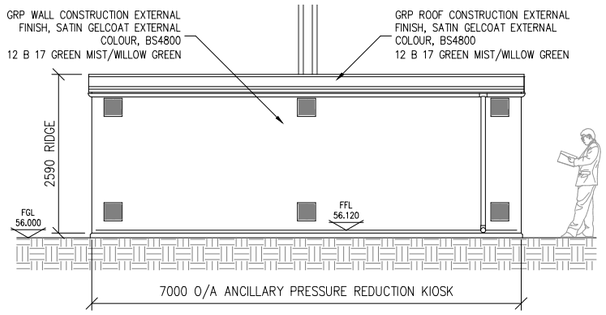

ELEVATION 1 – Facing South West
(Scale 1:100)

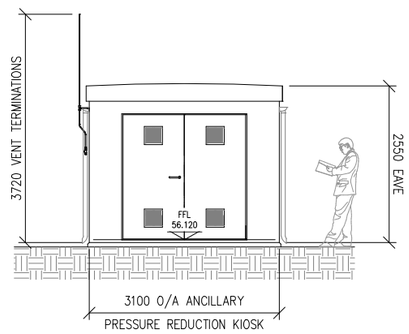

ELEVATION 2 – Facing North West
(Scale 1:100)

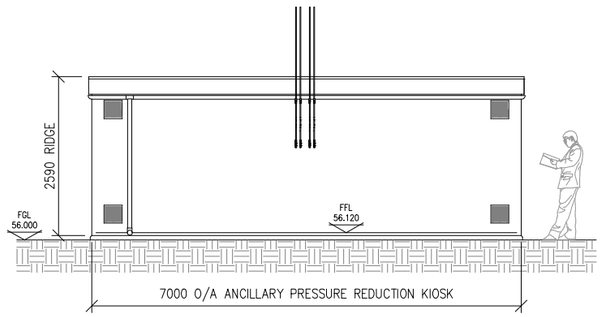

ELEVATION 3 – Facing North East
(Scale 1:100)

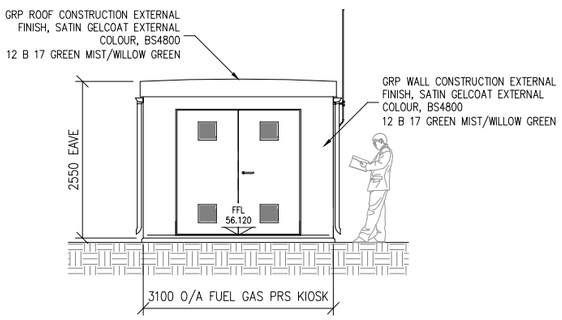

ELEVATION 4 – Facing South East
(Scale 1:100)

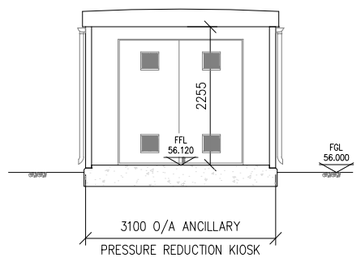

SECTION A–A
(Scale 1:100)

NOTES:

1. THIS DRAWING IS FOR PLANNING APPLICATION PURPOSES ONLY.
2. ALL DIMENSIONS ARE IN MILLIMETRES. UNLESS OTHERWISE STATED.
3. ALL ELEVATIONS ARE IN METRES, AND REFER TO MALIN HEAD DATUM.
4. INTERNAL PLANT LAYOUT SUBJECT TO DETAILED DESIGN SPECIFICATION.

PLANNING ISSUE

REV.	DATE	REVISION	BY	CHKD.	APPR.
1	8/9/25	REVISED AS PER CLIENT COMMENTS	TM	MAH	JL
0	20/8/25	PLANNING ISSUE	DC	TM	JL

Client
Gas Networks Ireland
P.O Box 51,
Gasworks Road,
Cork,
Rep of Ireland
T +353 21 4534000

Fingleton White
Bridge Street Centre
Portlaoise
Co. Laois
R32 W0CC
Ireland
T:(00353)(0)57 866 5400
www.fingleton.ie

Project
Gas to BGE Cashla
FLOOR PLAN, SECTION & ELEVATIONS OF ANCILLARY PRESSURE REDUCTION KIOSK

Drawn	Scale	Drawing Number	Rev.
D.MAILEY	1:100/A3	2183-DG-1004	1
Chkd. T.MALONE	Date 30/07/2025	sheet 1 of 1	
Apprd. J.LENNON	Status PLANNING		